Electrolux PROFESSIONAL

Modular Cooking Range Line thermaline 80 - Full Module Electric Fry Top, 1 Side

ITEM #

MODEL #

NAME #

SIS #

AIA #

588058 (MAHMAAHOAO)	Electric Fry Top with smooth chrome Plate, one-side operated
588066 (MAHNAAHOAO)	Electric Fry Top with ribbed chrome Plate, one-side operated

Short Form Specification

Item No.

Unit constructed according to DIN 18860_2 with 20 mm drop nose top. Internal frame for heavy duty sturdiness in stainless steel. 2 mm top in 1.4301 (AISI 304). Flat surface construction, easily cleanable. THERMODUL connection system enables seamless worktop when units are connected and avoids soil penetrating. Chromium-plated mild steel cooking surface with non-stick finishing for optimal grilling. Powerblock heating system for optimal temperature distribution. Large drain hole allows draining of cooking juices into a large collector. Overheat protection switches off the supply in case of overheating. Standby function saves energy and quickly recovers maximum power. Metal knobs with embedded hygienic silicon "soft" grip enable easier handling and cleaning.
IPX5 water resistant certification.
Configuration: One-side operated top. The base needs to be supplied by the factory. Please include appropriate base.

APPROVAL:

Main Features

- Choice of one or two heating zones. An indicator lamp shows operating state of each zone.
- Large drain hole on cooking surface permits the draining of residual cooking juices into a large collector placed under the cooking surface.
- Overheat protection: a temperature sensor switches off the supply in case of overheating.
- Stainless steel high splash guards on the rear and sides of cooking surface.
- Units have separate controls for each half module of the cooking surface.
- All major components may be easily accessed from the front.
- THERMODUL connection system creates a seamless work top when units are connected to each other thus avoiding soil penetrating vital components and facilitating the removal of units in case of replacement or service.
- Metal knobs with embedded hygienic silicon "soft" grip for easier handling and cleaning. The special design of the controls prevent infiltration of liquids or soil into vital components.
- Large visible digital display manufactured in tempered glass to resist heat and chemicals, showing temperatures or power settings. The display also shows on/off status of the appliance and on/off status of the heating elements.
- Powerblock heating system for optimal temperature distribution.

Construction

- IPX5 water resistance certification.
- 2 mm top in 1.4301 (AISI 304).
- Unit constructed according to DIN 18860_2 with 20 mm drop nose top and 70 mm recessed plinth.
- Flat surface construction with minimal hidden areas to easily clean all surfaces
- Internal frame for heavy duty sturdiness in 1.4301 (AISI 304).
- Cooking surface in chromium-plated mild steel with non-stick finishing for optimum grilling results.
- Unit constructed according to DIN 18860_2 with 20 mm drop nose top.
- Cooking surface to be completely smooth or completely ribbed.

Sustainability

- Standby function for energy saving and fast recovery of maximum power.

Modular Cooking Range Line thermaline 80 - Full Module Electric Fry Top, 1 Side

Optional Accessories

• Connecting rail kit, 800mm	PNC 912500	❑
• Portioning shelf, 800mm width	PNC 912526	❑
• Portioning shelf, 800mm width	PNC 912556	❑
• Folding shelf, 300x800mm	PNC 912577	❑
• Folding shelf, 400x800mm	PNC 912578	❑
• Fixed side shelf, 200x800mm	PNC 912583	❑
• Fixed side shelf, 300x800mm	PNC 912584	❑
• Fixed side shelf, 400x800mm	PNC 912585	❑
• Connecting rail kit: modular 80 (on the left) to ProThermetic tilting (on the right), ProThermetic stationary (on the left) to ProThermetic (on the right)	PNC 912971	❑
• Connecting rail kit: modular 80 (on the right) to ProThermetic tilting (on the left), ProThermetic stationary (on the right) to ProThermetic (on the left)	PNC 912972	❑
• Endrail kit, flush-fitting, left	PNC 913109	❑
• Endrail kit, flush-fitting, right	PNC 913110	❑
• Scraper for smooth plates (only for 588058)	PNC 913119	❑
• Scraper for ribbed plates (only for 588066)	PNC 913120	❑
• Endrail kit (12.5mm) for thermaline 80 units, left	PNC 913200	❑
• Endrail kit (12.5mm) for thermaline 80 units, right	PNC 913201	❑
• T-connection rail for back-to-back installations without backsplash	PNC 913227	❑
• Insert profile D=800mm	PNC 913230	❑
• Energy optimizer kit 24A - factory fitted	PNC 913246	❑
• Endrail kit, (12.5mm), for back-to-back installation, left	PNC 913249	❑
• Endrail kit, (12.5mm), for back-to-back installation, right	PNC 913250	❑
• Endrail kit, flush-fitting, for back-to-back installation, left	PNC 913253	❑
• Endrail kit, flush-fitting, for back-to-back installation, right	PNC 913254	❑
• Filter W=800mm	PNC 913665	❑
• Electric mainswitch 25A 4mm2 NM for modular H800 electric units (factory fitted)	PNC 913676	❑

Recommended Detergents

• C41 HI-TEMP RAPID DEGREASER. Suitable for cleaning plates and grills with high temperature surfaces (max 175°C). Pack of 6 1l bottles (includes 1 spray bottle code 0S2331)	PNC 0S2292	❑

Electric

Supply voltage:	
588058 (MAHMAAHOAO)	400 V/3N ph/50/60 Hz
588066 (MAHNAAHOAO)	400 V/3N ph/50/60 Hz
Total Watts:	15.3 kW

Key Information:

Configuration:	One-Side Operated;Top
Cooking Surface Depth:	615 mm
Cooking Surface Width:	700 mm
Working Temperature MIN:	80 °C
Working Temperature MAX:	280 °C
External dimensions, Width:	800 mm
External dimensions, Depth:	800 mm
External dimensions, Height:	250 mm
Net weight:	120 kg
Cooking surface type:	
588058 (MAHMAAHOAO)	Smooth
588066 (MAHNAAHOAO)	Ribbed
Cooking surface - material:	Chromium Plated mild steel mirror

Sustainability

Current consumption:	22.1 Amps

Modular Cooking Range Line
thermaline 80 - Full Module Electric Fry Top, 1 Side

Front

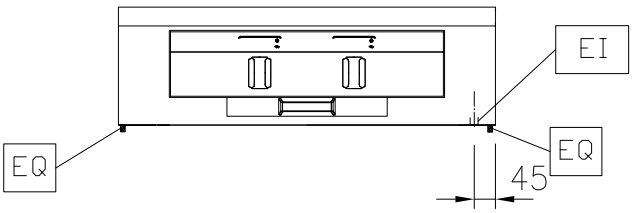

Side

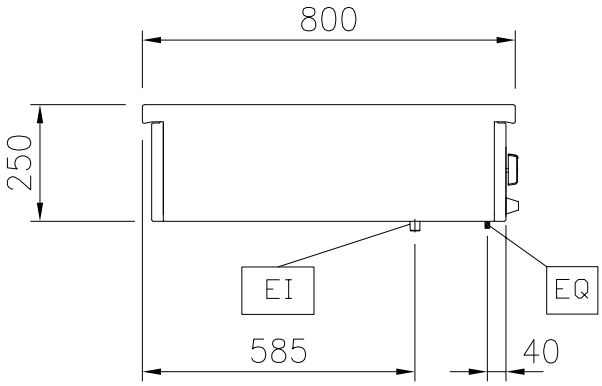

EI = Electrical inlet (power)
EQ = Equipotential screw

Top

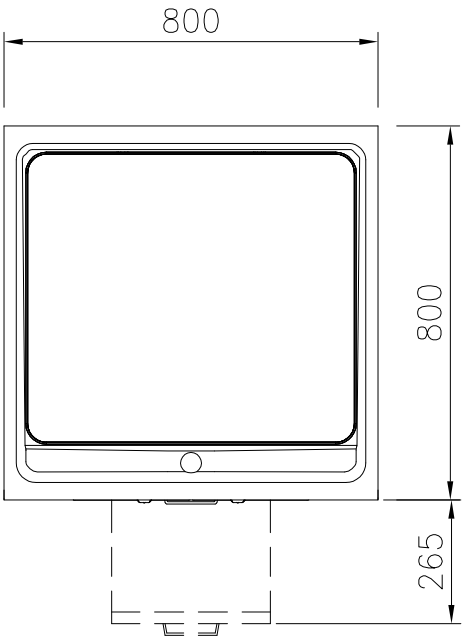

Front

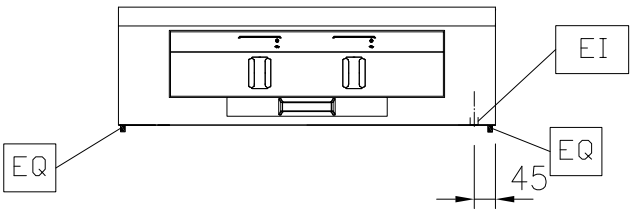

Side

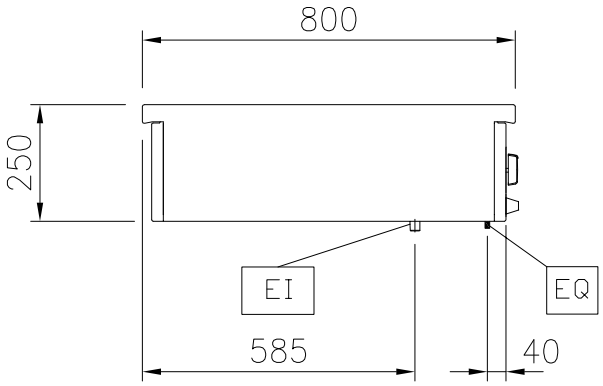

EI = Electrical inlet (power)
EQ = Equipotential screw

Top

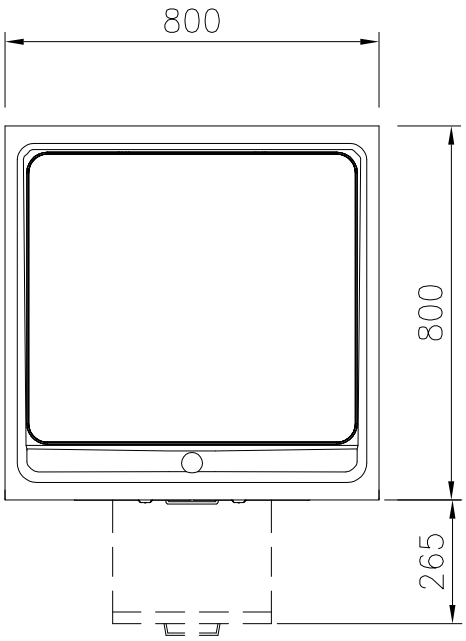

The company reserves the right to make modifications to the products without prior notice. All information correct at time of printing.